ZAXIS-6 series

HITACHI

Reliable solutions

# CLAMSHELL TELESCOPIC ARM

## 25 meter

APPLICATION & ATTACHMENT

ZAXIS 350LC

| Model Code | ZX350LC-6 | ZX350LCN-6 |
|---|---|---|
| Engine Rated Power | 210 kW (ISO 14396) | 210 kW (ISO 14396) |
| Operating Weight | 42 900 kg | 42 800 kg |

# ZX350LC-6 CTA. NO COMPROMISE

Hitachi is the only manufacturer to design and build excavators with clamshell telescopic arms in-house. These ZX-6 special application models share the same industry-leading technology as standard Hitachi excavators, and do not compromise on user-friendly appeal.

An optimum solution for complex below-ground construction projects, the ZX350LC-6 CTA can excavate to depths of 25 metres. It offers high levels of productivity, a powerful performance and exceptional versatility.

MIX
Paper from responsible sources
FSC® C051146

**6.** EXCEPTIONAL PRODUCTIVITY

**8.** POWERFULL PERFORMANCE

**10.** ULTIMATE VERSATILITY

HITACHI
ZAXIS
350LC

# DEMAND PERFECTION

Designed in response to the needs of European customers, the ZX350LC-6 excavator with clamshell telescopic arm has been developed to perfection for underground construction projects. Improvements include a newly designed clamshell bucket and several options to enhance safety and versatility.

As a result, the new Zaxis-6 model is a cost-effective alternative to traditional methods of below-ground excavation, built to the same high standards of durability, performance and efficiency as all Hitachi construction equipment.

**Improved safety**
Optional LED light enhance visibility.

**Ultimate durability**
Reinforced clamshell bucket and cylinder protection prevent damage.

**Exceptional flexibility**
Optional standard arm and detachable counterweight offer greater versatility.

**Enhanced productivity**
Short cycle time due to exclusively designed hydraulic circuit and pressure setting.

**Excellent visibility**
Sliding cab and floor window provides a clear view for operators.

**High quality**
Only the best design elements and materials.

The sliding cab enhances visibility and safety.

The telescopic arm extends and retracts smoothly with a full load.

# EXCEPTIONAL PRODUCTIVITY

Hitachi Zaxis-6 excavators with clamshell telescopic arms are a quick and cost-effective alternative to the traditional methods of below-ground excavation using skips, cranes and conveyor belts. Capable of removing soil from 25m below ground, they can be used to load trucks to transport materials swiftly off site. They have been designed to boost productivity on complex and challenging excavation projects.

The new clamshell bucket offers greater durability.

## Smooth and safe operation

The clamshell telescopic arm of the ZX350LC-6 uses a technologically advanced combination of rope and hydraulic cylinders. It has been designed to extend and retract smoothly in seconds. For enhanced safety the twin rope system ensures that, in the unlikely event that one rope should break, the other will hold the telescopic arm firmly in place.

## Exceptional visibility

The cab of the ZX350LC-6 CTA is positioned 960mm further forward than on a standard model. It can also slide a further 1,300mm to provide the operator with a better view of the digging area below. This not only enhances visibility, but also safety on the job site.

## Robust design

The newly developed clamshell bucket for the ZX350LC-6 with 25-metre reach offers greater durability. Its design is based on the proven capability of the same model with 30-metre reach. The cylinder's loading pressure has been reduced by the addition of a frame and side frame.

*A powerful, productive and fuel-efficient model – ten times more productive than the conveyor*

Dror Balulu, owner, Dror Balulu Civil Engineering

# POWERFUL PERFORMANCE

Hitachi has utilised its excavator manufacturing expertise to design and build its clamshell telescopic models in-house. They are ideal for working in limited spaces that require an efficient form of vertical lifting. Thanks to several performance-enhancing features, they can complete underground construction projects safely and on schedule.

## Superior visibility

Thanks to a large polycarbonate window in the floor of the sliding cab, the operator has an excellent view of the site below. This enables the operator to work safely and precisely, ensuring a high level of performance.

## Comfortable operation

Optional LED working lights are located at the front of the sliding cab to illuminate the area below ground. These give the operator an optimum view of the job site, and enables a comfortable and safe operation. The lights are adjustable and two settings can be used at the same time: low beam and high beam.

## Safety at work

Access to the cab of the ZX350LC-6 is easy thanks to the long step on the side of the machine. Conveniently located handrails provide additional support to the operator as they move to and from the cab, and contribute to a safe working environment.

A long step and handrails enable safe access to the cab.

Optional LED lights highlight the working area for operators.

A window in the floor of the cab gives a better view of the site below.

*It is the perfect solution. It is easy to manoeuvre and the cab is comfortable*

João Almeida, operator, SGC

# ULTIMATE VERSATILITY

Hitachi Zaxis-6 medium excavators are renowned for their versatility, but the clamshell telescopic model exceeds this reputation with its suitability for challenging below-ground excavation projects. Powerful, fast and stable, it is also easy to manoeuvre in confined areas. And when a more straightforward application arises, it can be easily adjusted to operate as a standard medium excavator.

## Enhanced flexibility

To meet the needs of customers requiring greater versatility from their equipment, the ZX350LC-6 clamshell telescopic arm model can be used as a standard machine with a few simple adjustments. By changing the counterweight, boom and arm, it can also be used for light excavation projects.

## Warning lights and safety alarms

The safe performance of the Zaxis-6 excavator with clamshell telescopic arm is aided by the use of warning lights and safety alarms. For instance, if either of the two ropes were to break suddenly or extend too far, an indication light would alert the operator immediately. In addition, a warning buzzer will alert the operator if too much pressure is applied once the clamshell bucket has reached the ground and is excavating the material.

## Hose rupture valve

The clamshell telescopic arm is also equipped with a hose rupture valve, which, in the unlikely event of a damaged cylinder, will prevent any other impact on the machine or the environment.

Switch between workmodes via the monitor.

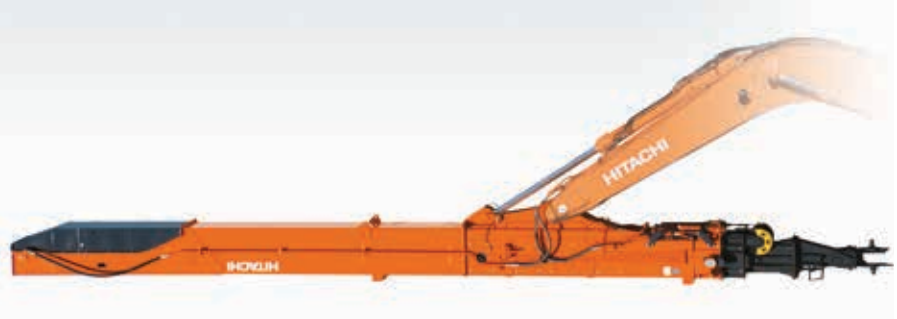


- Increased work oppertunity
- Easy switchover
- Save total fleet cost

The detachable counterweight enhances the machine's versatility.

# SPECIFICATIONS

## ZAXIS 350LC 25 m

### ENGINE

| | |
|---|---|
| Model | Isuzu AQ-6HK1X |
| Type | 4-cycle water-cooled, common rail direct injection |
| Aspiration | Variable geometry turbocharged, intercooled, cooled EGR |
| Aftertreatment | DOC and SCR system |
| No. of cylinders | 6 |
| Rated power | |
| ISO 14396 | 210 kW at 1 900 $min^{-1}$ |
| ISO 9249, net | 202 kW at 1 900 $min^{-1}$ |
| SAE J1349, net | 202 kW at 1 900 $min^{-1}$ |
| Maximum torque | 1 080 Nm at 1 500 $min^{-1}$ |
| Piston displacement | 7.790 L |
| Bore and stroke | 115 mm x 125 mm |
| Batteries | 2 x 12 V / 135 Ah |

### HYDRAULIC SYSTEM

#### Hydraulic Pumps

| | |
|---|---|
| Main pumps | 3 variable displacement axial piston pumps |
| Maximum oil flow | 2 x 288 L/min |
| | 1 x 260 L/min |
| Pilot pump | 1 gear pump |
| Maximum oil flow | 36.4 L/min |

#### Hydraulic Motors

| | |
|---|---|
| Travel | 2 variable displacement axial piston motors |
| Swing | 1 axial piston motor |

#### Relief Valve Settings

| | |
|---|---|
| Implement circuit | 34.3 MPa |
| Swing circuit | 32.4 MPa |
| Travel circuit | 34.3 MPa |
| Pilot circuit | 3.9 MPa |
| Power boost | 38.0 MPa |

#### Hydraulic Cylinders

High-strength piston rods and tubes. Cylinder cushion mechanisms provided in boom and arm cylinders to absorb shock at stroke ends.

### CONTROLS

Pilot controls. Hitachi's original shockless valve.

| | |
|---|---|
| Implement levers | 2 |
| Travel levers | 2 |
| Telescopic arm control pedal | 1 |

### UPPERSTRUCTURE

#### Revolving Frame

D-section frame for resistance to deformation.

#### Swing Device

Axial piston motor with planetar y reduction gear is bathed in oil. Swing circle is single-row. Swing parking brake is spring-set/hydraulic-released disc type.

| | |
|---|---|
| Swing speed | 9.7 $min^{-1}$ |
| Swing torque | 120 kNm |

#### Operator's Cab

Independent spacious cab, 1 005 mm wide by 1 675 mm high, conforming to ISO* Standards.

* International Organization for Standardization

### UNDERCARRIAGE

#### Tracks

Heat-treated connecting pins with dirt seals. Hydraulic (grease) track adjusters with shock-absorbing recoil springs.

#### Numbers of Rollers and Shoes on Each Side

| | |
|---|---|
| Upper rollers | 2 |
| Lower rollers | 8 |
| Track shoes | 48 |
| Track guards | 3 |

#### Travel Device

Each track driven by 2-speed axial piston motor.
Parking brake is spring-set/hydraulic-released disc type.
Automatic transmission system: High-Low.

| | |
|---|---|
| Travel speeds | High : 0 to 5.0 km/h |
| | Low : 0 to 3.2 km/h |
| Maximum traction force | 298 kN |
| Gradeability | 26% (15 degree) continuous |

### WEIGHTS AND GROUND PRESSURE

[ZX350LC-6]
Equipped with type S-TC300R-7 and 1.30 $m^3$ clamshell bucket (SAE, PCSA heaped).

[ZX350LCN-6]
Equipped with type S-TC300R-7 and 1.15 $m^3$ clamshell bucket (SAE, PCSA heaped).

| Model | Shoe type | Shoe width | Operating weight | Ground pressure |
|---|---|---|---|---|
| ZX350LC-6 | Triple grouser | 600 mm | 42 900 kg | 81 kPa (0.83 kgf/$cm^2$) |
| ZX350LCN-6 | Triple grouser | 600 mm | 42 800 kg | 81 kPa (0.83 kgf/$cm^2$) |

### SOUND LEVEL

Sound level in cab according to ISO 6396 ..... LpA 69 dB(A)
External sound level according to ISO 6395 and
EU Directive 2000/14/EC ..... LwA 105 dB(A)

### SERVICE REFILL CAPACITIES

| | |
|---|---|
| Fuel tank | 630.0 L |
| Engine coolant | 43.0 L |
| Engine oil | 48.0 L |
| Swing device | 17.0 L |
| Travel device (each side) | 9.2 L |
| Hydraulic system | 340.0 L |
| Hydraulic oil tank | 180.0 L |
| DEF/AdBlue® tank | 70.0 L |

### CLAMSHELL BUCKET

| Model | | ZX350LC-6 | ZX350LCN-6 |
|---|---|---|---|
| Bucket type | | S-SP130-A | S-SP115-A |
| Bucket capacity | $m^3$ | 1.30 | 1.15 |
| Max. digging force | kN (kgf) | 88.3 (9 000) | 92.7 (9 450) |
| Max. height | mm | 3 200 | 3 150 |
| Opened max. height | mm | 2 720 | 2 710 |
| Closed width | mm | 2 000 | 1 900 |
| Opened width | mm | 2 290 | 2 180 |
| Bucket width | mm | 1 200 | 1 200 |
| Number of teeth | | 9 | 9 |
| Weight | kg | 2 000 | 1 970 |

Shell push type

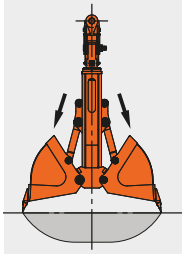

# SPECIFICATIONS

## ZAXIS 350LC 25 m

### WORKING RANGES

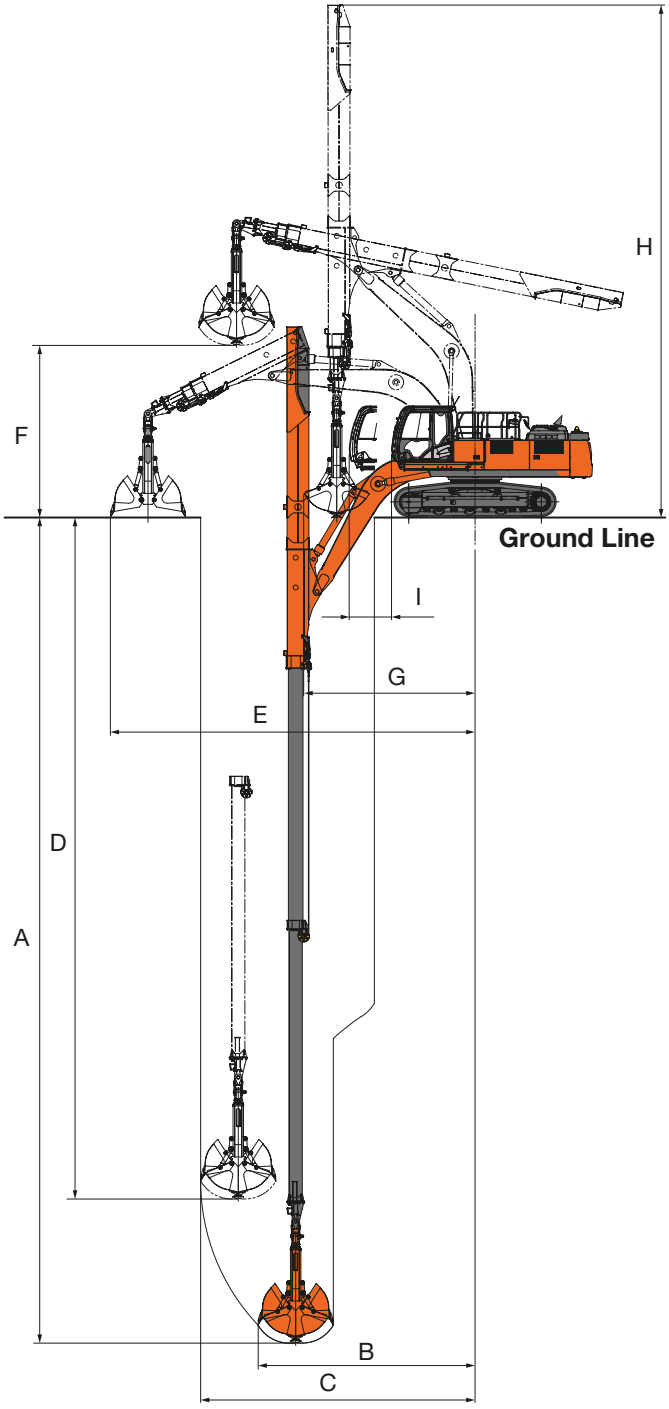


Unit: mm

| Model | ZX350LC-6 | ZX350LCN-6 |
|---|---|---|
| Telescopic arm type | S-TC300R-7 | |
| Telescopic arm system | Hydraulic cylinder + wire rope | |
| A Max. vertical digging depth | 25 200 | 25 160 |
| B Radius at max. vertical digging depth | 6 630 | 6 570 |
| C Max. vertical digging radius | 8 380 | 8 330 |
| D Depth at max. vertical digging radius | 20 750 | 20 700 |
| E Max. working radius | 11 140 | 11 090 |
| F Max. dumping height | 5 330 | 5 380 |
| G Min. front swing radius | 5 230 | 5 180 |
| H Height at min. front swing radius | 15 660 | |
| I Cab sliding distance | 1 300 | |

# SPECIFICATIONS

## ZAXIS 350LC 25 m

### DIMENSIONS

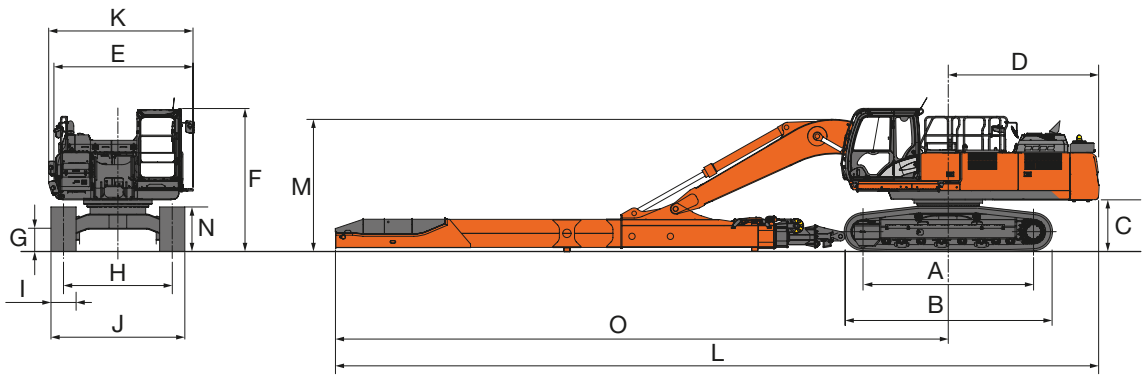


Unit: mm

| | | ZX350LC-6 | ZX350LCN-6 |
|---|---|---|---|
| A | Distance between tumblers | 4 050 | |
| B | Undercarriage length | 4 940 | |
| *C | Counterweight clearance | 1 160 | |
| D | Rear-end swing radius | 3 600 | |
| E | Overall width of upperstructure | 3 290<br>Folding the Step: 3 060 | |
| F | Overall height of cab | 3 420 | |
| *G | Min. ground clearance | 500 | |
| H | Track gauge | 2 590 | 2 390 |
| I | Track shoe width | G 600 | |
| J | Undercarriage width | 3 190 | 2 990 |
| K | Overall width | 3 390<br>Folding the Step: 3 160 | 3 290<br>Folding the Step: 3 060 |
| L | Overall length | 18 150 | |
| M | Overall height of boom | 3 250 | |
| N | Track height with triple grouser shoes | 1 070 | |
| O | Swing centre to front distance | 14 570 | |

* Excluding track shoe lug G: Triple grouser shoe

### TRANSPORTATION

| | ZX350LC-6 | ZX350LCN-6 |
|---|---|---|
| Width: | 3 190 mm | 2 990 mm |
| Weight:<br>(With Sliding cab) | 25 510 kg | 25 450 kg |

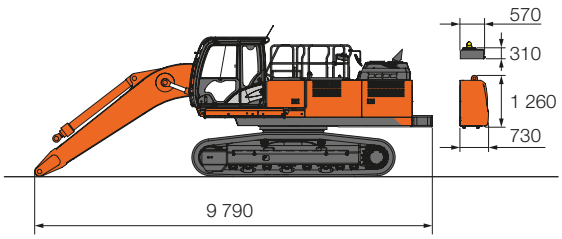


Unit: mm

| | ZX350LC-6 | ZX350LCN-6 |
|---|---|---|
| Counterweight | | |
| Width: | 2 950 mm | 2 950 mm |
| Weight: | 7 600 kg | 7 600 kg |
| Additional counterweight | | |
| Width: | 2 780 mm | 2 780 mm |
| Weight: | 2 230 kg | 2 230 kg |

**Telescopic Arm**

**ZX350LC-6**

Width: 760 mm Weight: 5 450 kg

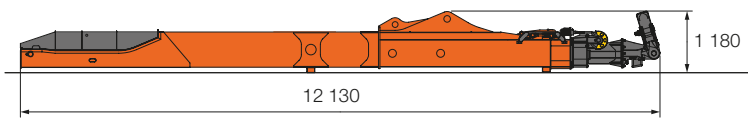


**Clamshell Bucket**

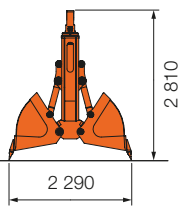


Width: 1 270 mm
Weight: 2 000 kg

**ZX350LCN-6**

Width: 760 mm Weight: 5 450 kg

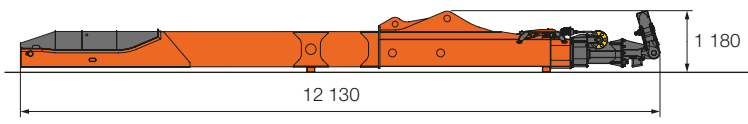


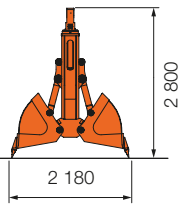


Width: 1 270 mm
Weight: 1 970 kg

# EQUIPMENT

● : Standard equipment ○ : Optional equipment

## ENGINE

| | |
|---|---|
| Aftertreatment device | ● |
| Air cleaner double filters | ● |
| Alternator 50 A | ● |
| Auto idle system | ● |
| Auto shut-down control | ● |
| Cartridge-type engine oil filter | ● |
| Cartridge-type fuel main filter | ● |
| Cold fuel resistence valve | ● |
| DEF/AdBlue® tank inlet strainer and extension filler | ● |
| DEF/AdBlue® tank with ISO magnet adapter | ● |
| Dry-type air filter with evacuator valve (with air filter restriction indicator) | ● |
| Dust-proof indoor net | ● |
| ECO/PWR mode control | ● |
| Electrical fuel feed pump | ● |
| Engine oil drain coupler | ● |
| Expansion tank | ● |
| Fan guard | ● |
| Fuel cooler | ● |
| Fuel pre-filter with water separator | ● |
| Isolation-mounted engine | ● |
| Maintenance free pre-cleaner | ○ |
| Radiator, oil cooler and intercooler | ● |

## HYDRAULIC SYSTEM

| | |
|---|---|
| Auto power lift | ● |
| Control valve with main relief valve | ● |
| Full-flow filter | ● |
| High mesh full flow filter with restriction indicator | ○ |
| Hose rupture valve for arm | ● |
| Hose rupture valve for boom | ● |
| Pilot filter | ● |
| Power boost | ● |
| Suction filter | ● |
| Swing dampener valve | ● |
| Two extra port for control valve | ● |
| Variable hydraulic fan for oil cooler | ● |
| Reliefvalve for telescopic arm | ● |
| Work mode selector | ● |

## CAB

| | |
|---|---|
| All-weather sound suppressed steel cab | ● |
| AM-FM radio | ● |
| Ashtray | ● |
| Auto control air conditioner | ● |
| AUX terminal and storage | ● |
| Cigarette lighter 24 V | ● |
| CRES V (Center pillar reinforced structure) cab | ● |
| Drink holder with hot & cool function | ● |
| Electric double horn | ● |
| Engine shut-off switch | ● |
| Equipped with reinforced, tinted (green color) glass windows | ● |
| Evacuation hammer | ● |
| Fire extinguisher bracket | ○ |
| Floor mat | ● |
| Footrest | ● |
| Front window washer | ● |
| Glove compartment | ● |
| Hot & cool box | ● |
| Intermittent windshield wipers | ● |
| Key cylinder light | ● |
| Laminated round glass window | ○ |
| LED room light with door courtesy | ● |
| OPG top guard Level I (ISO10262) compliant cab | ● |
| OPG top guard Level II (ISO10262) compliant cab | ○ |
| Pilot control shut-off lever | ● |
| Power outlet 12 V | ● |
| Rain guard | ○ |
| Rear tray | ● |
| Retractable seat belt | ● |
| Rubber radio antenna | ● |
| Seat : air suspension seat with heater | ● |
| Seat adjustment part : backrest, armrest, height and angle, slide forward / back | ● |
| Short wrist control levers | ● |
| Sun visor (front window/side window) | ○ |
| Transparent roof with slide curtain | ● |
| Windows on front, upper, lower and left side can be opened | ● |
| 2 speakers | ● |
| 4 fluid-filled elastic mounts | ● |
| Sliding cab | ● |
| Cab front guard for sliding cab | ● |

## MONITOR SYSTEM

| | |
|---|---|
| Alarms: overheat, engine warning, engine oil pressure, alternator, minimum fuel level, hydraulic filter restriction, air filter restriction, work mode, overload, SCR system trouble, etc | ● |
| Alarm buzzers: overheat, engine oil pressure, overload, SCR system trouble | ● |
| Display of meters: water temperature, hour, fuel rate, clock, DEF/AdBlue® rate | ● |
| Other displays: work mode, auto-idle, glow, rearview monitor, operating conditions, etc | ● |
| 32 languages selection | ● |

## LIGHTS

| | |
|---|---|
| Additional boom light with cover | ○ |
| Additional cab roof front lights | ○ |
| Additional cab roof rear lights | ○ |
| Additional LED light on telescopic arm | ○ |
| Additional LED light on sliding cab | ○ |
| Rotating lamp | ○ |
| 2 working lights | ● |

## UPPER STRUCTURE

| | |
|---|---|
| Batteries 2 x 135 Ah | ● |
| Battery disconnect switch | ● |
| Body top handrail | ● |
| Counterweight 7 600 kg | ● |
| Additional counterweight 2 230 kg | ● |
| Electric fuel refilling pump with auto stop and filter | ● |
| Fuel level float | ● |
| Hydraulic oil level gauge | ● |
| Lockable fuel refilling cap | ● |
| Lockable machine covers | ● |
| Lockable tool box | ● |
| Platform handrail | ● |
| Rear view camera | ● |
| Rear view mirror (right & left side) | ● |
| Skid-resistant plates and handrails | ● |
| Swing parking brake | ● |
| Undercover | ● |
| Utility space | ● |
| Electric grease gun | ● |
| Side walk for sliding cab | ● |

## UNDERCARRIAGE

| | |
|---|---|
| Bolt-on sprocket | ● |
| Reinforced track links with pin seals | ● |
| Shoe: 600 mm triple grouser | ● |
| Track undercover | ○ |
| Travel direction mark on track frame | ● |
| Travel motor covers | ● |
| Travel parking brake | ● |
| Upper and lower rollers | ● |
| 3 track guards (each side) and hydraulic track adjuster | ● |
| 4 tie down hooks | ● |
| Step for sliding cab | ● |

## FRONT ATTACHMENTS

| | |
|---|---|
| Backhoe front | ○ |
| Telescopic arm 25 m | ● |
| Clamshell bucket 1.3 $m^3$ | ● |

## ATTACHMENTS

| | |
|---|---|
| Accessories for 2 speed selector | ○ |
| Telescopic arm piping | ● |

## MISCELLANEOUS

| | |
|---|---|
| Global e-Service | ● |
| Onboard information controller | ● |
| Standard tool kit | ● |
| Theft prevention system* | ○ |
| Abnormal rope alarm | ● |
| Motion alarm | ● |

Standard and optional equipment may vary by country, so please consult your Hitachi dealer for details.
* Hitachi Construction Machinery cannot be held liable for theft, any system will just minimize the risk of theft.

Prior to operating this machine, including satellite communication system, in a country other than a country of its intended use, it may be necessary to make modifications to it so that it complies with the local regulatory standards (including safety standards) and legal requirements of that particular country. Please do not export or operate this machine outside the country of its intended use until such compliance has been confirmed. Please contact your Hitachi dealer in case of questions about compliance.

These specifications are subject to change without notice.
Illustrations and photos show the standard models, and may or may not include optional equipment, accessories, and all standard equipment with some differences in color and features.
Before use, read and understand the Operator's Manual for proper operation.

**Hitachi Construction Machinery**
**www.hitachicm.eu**

**KA-EN265EU**

Printed in Europe