ZAXIS-6 series

HITACHI

Reliable solutions

ZAXIS210X

HYDRAULIC EXCAVATOR

Model code : ZX210X-6 / ZX210LCX-6

Engine rated power : 128.4 kW (ISO14396)

Operating weight : 22 000 – 23 400 kg

Bucket ISO heaped : 0.51 – 1.20 m³

ZX210LCX-6

The intelligent excavator

6. Forefront of technology

12. First-class comfort

8. Superior productivity

14. Support Chain

10. Intelligent operation

16. Hitachi Construction Machinery

No compromise

MIX
Paper from responsible sources
FSC® C051146
FSC
www.fsc.org

Combining industry-proven reliability with extreme precision

Exceptional efficiency

Incorporating the latest technological advancements from Hitachi, the ZX210X-6 excavator has been developed to work with exceptional accuracy and efficiency. As a result, less time is needed to complete construction projects, which means reduced running costs for your business and fewer emissions.

Enhanced efficiency
The overcut protection function enables efficient excavation without over digging.

Perfect positioning
Laser receiver for machine control is optional.

Controlled operation
The angle of the bucket is maintained and controlled, so slopes can be completed faster and in fewer movements.

Improved safety
Side-view cameras enhance on the left and right side visibility.

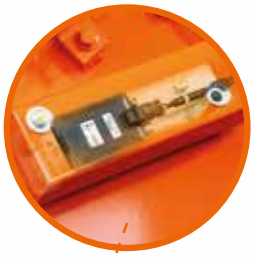

High precision
Sensors on the body, boom, arm and bucket measure the incline of the excavator, and the angle of the front.

Superior accuracy
Receivers enable 3D functionality and identify real-time position of the excavator.

Advanced technology
Hitachi hydraulics and sensors provide unrivalled accuracy.

Maximum availability
Continuous monitoring of engine and hydraulic oil quality thanks to ConSite oil sensors.

Easy maintenance
Convenient and wide-opening engine cover.

Forefront of technology

Hitachi is dedicated to creating innovations that solve challenges in the construction industry. It has developed the ZX210X-6 to address improvements in efficiency and safety, as well as the potential decrease in skilled labour due to ageing populations. As a result, it is one of the most technologically advanced Hitachi excavators to date.

Accurate positioning

3D design data for the site is created with compatible software for the ZX210X-6 excavator. This data is sent to the machine via the internet or downloaded using a USB device. The real-time position and direction of the excavator is ascertained by using satellite signals, which are sent to several base stations on site and receivers on the machine. Correction signals are sent via the base station and VRS, so if any changes are made to the design, they can be shared with the excavator in real time via the internet.

Responsive sensors

Highly precise and responsive IMU sensors mounted on the body, boom, arm and bucket enable measurement of the incline of the excavator, and the angle of the front of the machine. They are extremely durable and also easy to replace when required. The ZX210X-6 has a hydraulic control unit that works together with the sensors to enable accurate operations.

Efficient operation

Work is carried out in accordance with the display on the monitor. Designed to boost efficiency, it shows numerical information, work modes and settings, and the distance between the target surface and the attachment. The touchscreen enables the operator to rotate the view of the machine 360˚, and also zoom in and out of the view to monitor progress in more detail.

GNSS receivers are used to measure the excavator's position in real time.

Highly durable sensors monitor the angles of boom, arm, bucket and excavator body.

The hydraulic control unit works in harmony with sensors for accurate operation.

Trenches can be created efficiently using the overcut protection function.

Bucket angle retention mode enables slopes to be completed more quickly.

Superior productivity

The ZX210X-6 has a considerable impact on productivity. Due to its highly accurate performance, no reworking is required. The need for staking is significantly reduced before or after excavation, and tasks can be completed with fewer movements and in less time.

Semi-automatic digging control

The overcut protection function enables operators to work quickly and easily, without worrying about over digging. The edge of the bucket is controlled, so that it follows the target surface.

Consistent accuracy

The angle of the bucket can be maintained during slope finishing, for example, enabling work to be completed more quickly and with fewer movements. The operator is then free to focus on the operation of the boom and arm, and does not need to consider the bucket angle.

Speed and precision

There are two machine control work modes to choose from, according to requirements. The rough excavation mode prioritises speed, enabling work to be performed at a speed controlled by the operator. Finishing mode restricts speed in order to prioritise accuracy and precision.

Operators can prioritise speed or accuracy using two different work modes.

Intelligent operation

Performing construction activities with excavators that utilise machine control technology significantly increases the quality of the final result, and this is less dependent on the skill of the operator. Hitachi offers both 2D and 3D systems for the ZX210X-6 with machine control functionality.

Machine control

The front of the machine is controlled semi-automatically in real time, enabling smooth, precise and easy operation. The ZX210X-6 has a unique electromagnetic valve unit for machine control, developed using HCM technology. This works in perfect harmony with the machine's hydraulic system for exceptional accuracy.

3D system

The ZX210X-6 receives 3D design data (created with compatible software) via the internet or a USB download device. The real-time position of the excavator is ascertained by satellite positioning and sensors. Work is carried out in accordance with the display on the monitor. The need for staking is reduced significantly using the 3D system. If any changes are made to the design, they can be shared with the excavator in real time via the internet.

2D system

The 2D system uses coordinates, calculated from design drawings. Data is created from this and entered manually by the operator into the monitor of the ZX210X-6. The 2D system also uses the machine as a reference point, taking information about its relative position from the sensors on the boom, arm, bucket and body of the excavator. Some staking is required for measuring on site when using the 2D system.

The 2D system uses the machine as a reference point.

The 3D system identifies the actual position of the excavator.

The machine receives 3D data via the internet or a USB device.

The spacious cab is equipped with ergonomic controls.

Operators can rotate, or zoom in and out of, the view on the monitor using the touchscreen.

First-class comfort

The comfort of operators is a priority for Hitachi. The cab of the ZX210X-6 has been designed to minimise fatigue, enhance visibility and safety, and ensure a user-friendly and intuitive operating experience.

Perfect workspace

Like all Zaxis excavators, the ZX210X-6 is equipped with a spacious cab for operators. It offers an excellent view of the job site, and a comfortable working environment, thanks to features such as ergonomic controls, sound insulation and air conditioning.

User-friendly operation

The easy-to-read 10.1-inch touchscreen monitor displays hi-res 3D graphics and operates like a smartphone. It is extremely durable, with excellent resistance to water and dust.

Enhanced visibility

The operator can switch views on the monitor using the touchscreen and according to preference. The split screen functionality can show two or three views simultaneously. Five views are available: cross section, horizontal, profile, 3D and level. The overlay function enables images displayed/not displayed on the screen to be switched.

Various split screen options are provided on the monitor.

Reducing the total cost of ownership

Hitachi has created the Support Chain after-sales programme to ensure optimum efficiency, as well as minimal downtime, reduced running costs and high resale values

Global e-Service

Technical support

Hitachi Parts

Global e-Service

Hitachi has developed two remote monitoring systems as part of its Global e-Service online application. Owner's Site and ConSite are an integral part of the excavator, which sends operational data daily via GPRS or satellite to www.globaleservice.com. This allows immediate access to the Owner's Site, and the vital information that is required for support on job sites.

Comparing the ratio of operating and non-operating hours helps to enhance efficiency. Effective management of maintenance programmes helps to maximise availability. Running costs can also be managed by analysing the fuel consumption. The location and movements of each machine are clearly displayed for essential planning.

An automatic service report – ConSite – sends a monthly email summarising the information from Global e-Service for each machine. This includes: daily working hours and fuel consumption data; statistics on the operating mode ratio, plus a comparison for fuel consumption/efficiency, and CO_2 emissions.

Technical support

Each Hitachi service technician receives full technical training from HCME in Amsterdam. These sessions provide access to the same technical knowledge available within the Hitachi quality assurance departments and design centres. Technicians combine this global expertise with the local language and culture of the customer to provide the highest level of after-sales support.
Extended warranty and service contracts
Every new Hitachi Zaxis-6 model is covered by a full manufacturer's warranty. For extra protection – due to severe working conditions or to minimise equipment repair costs – Hitachi dealers offer a unique extended warranty called HELP (Hitachi Extended Life Program) and comprehensive service contracts. These can help to optimise the performance of each machine, reduce downtime and ensure higher resale values.

Parts

Hitachi offers a wide range and a high availability of parts dispatched from the 53,000 m² HCME European Parts Depot in The Netherlands.

- Hitachi Genuine Parts: allow machines to work for longer, with lower running and maintenance costs.
- Hitachi Select Parts and 2Genuine Parts: especially for older machines, they cost less, are of proven quality and come with the manufacturer's warranty.
- Performance Parts: to cope with highly demanding conditions, they have been engineered for greater durability, better performance or longer life.
- Remanufactured components: offering an economically viable solution, they are the best option when preventative replacements are required.

Whatever the choice, the renowned quality of Hitachi construction machinery is assured.

ConSite oil sensors

Available as part of the ConSite remote fleet monitoring system (see opposite) is a unique innovation developed by Hitachi. Data is extracted from two sensors that continuously monitor the quality of an excavator's engine and hydraulic oil, 24/7.

This data is transmitted on a daily basis to ConSite via GPRS. ConSite oil can alert the machine's owner if any of the following are detected: any contamination within engine oil and hydraulic oil; a rapid increase in soot content; low viscosity; or the presence of any pollutant, such as dust and sand. An alert is then sent to the owner and dealer via email or text, so that necessary actions can then be taken.

An oil sample could be taken, for example, then sent to a laboratory. From this, a complete analysis is generated, allowing the exact cause to be identified. The dealer can then fix any faults conveniently and quickly on site.

Reduced maintenance costs

Hitachi is the first manufacturer to install this innovative feature, which enables customers to save time and money. It reduces unscheduled downtime, and provides peace of mind for owners thanks to a scheduled maintenance programme and maximum availability. ConSite oil sensors also contribute to a higher resale value as they ensure the machine remains in excellent working condition.

From mid-2018, ConSite oil sensors are available for medium and large Zaxis-6 excavators, ranging from the ZX210-6 to the ZX890-6.

EH dump trucks

EX ultra-large excavators

ZW wheel loaders

Mini excavators

Building a better future

Established in 1910, Hitachi, Ltd. was built upon a founding philosophy of making a positive contribution to society through technology. This is still the inspiration behind the Hitachi group's reliable solutions that answer today's challenges and help to create a better world.

Hitachi, Ltd. is now one of the world's largest corporations, with a vast range of innovative products and services. These have been created to challenge convention, improve social infrastructure and contribute to a sustainable society.

Hitachi Construction Machinery Co., Ltd. (HCM) was founded in 1970 as a subsidiary of Hitachi, Ltd. and has become one of the world's largest construction equipment suppliers. A pioneer in producing hydraulic excavators, HCM also manufactures wheel loaders, rigid dump trucks, crawler cranes and special application machines at state-of-the-art facilities across the globe.

Incorporating advanced technology, Hitachi construction machinery has a reputation for the highest quality standards. Suitable for a wide range of industries, it is always hard at work around the world – helping to create infrastructure for a safe and comfortable way of living, developing natural resources and supporting disaster relief efforts.

With the introduction of its ICT construction solutions, Hitachi has taken its advanced technology to the next level. These solutions connect people, information, processes and technology to create safe and productive working environments. The innovative range of Hitachi ICT excavators plays a pivotal role in this development.

Hitachi Zaxis excavators are renowned for being reliable, durable and versatile – capable of delivering the highest levels of productivity under the most challenging of conditions.
They are designed to provide owners with a reduced total cost of ownership, and operators with the ultimate level of comfort and safety.

SPECIFICATIONS

ENGINE

Model	Isuzu AR-4HK1X
Type	4-cycle water-cooled, common rail direct injection
Aspiration	Variable geometry turbocharged, intercooled, cooled EGR
Aftertreatment	DOC and SCR system
No. of cylinders	4
Rated power	
ISO 14396	128.4 kW at 2 000 min^{-1}
ISO 9249, net	122 kW at 2 000 min^{-1}
SAE J1349, net	122 kW at 2 000 min^{-1}
Maximum torque	670 Nm at 1 600 min^{-1}
Piston displacement	5.193 L
Bore and stroke	115 mm x 125 mm
Batteries	2 x 12 V / 126 Ah

HYDRAULIC SYSTEM

Hydraulic Pumps

Main pumps	3 variable displacement axial piston pumps
Maximum oil flow	2 x 212 L/min 1 x 189 L/min
Pilot pump	1 gear pump
Maximum oil flow	33.6 L/min

Hydraulic Motors

Travel	2 variable displacement axial piston motors
Swing	1 axial piston motor

Relief Valve Settings

Implement circuit	34.3 MPa
Swing circuit	32.4 MPa
Travel circuit	35.5 MPa
Pilot circuit	3.9 MPa
Power boost	38.0 MPa

Hydraulic Cylinders

	Quantity	Bore	Rod diameter
Boom	2	120 mm	85 mm
Arm	1	135 mm	95 mm
Bucket	1	115 mm	80 mm

UPPERSTRUCTURE

Revolving Frame

D-section frame for resistance to deformation.

Swing Device

Axial piston motor with planetary reduction gear is bathed in oil. Swing circle is single-row. Swing parking brake is spring-set/hydraulic-released disc type.

Swing speed	11.8 min^{-1}
Swing torque	68 kNm

Operator's Cab

Independent spacious cab, 1 005 mm wide by 1 675 mm high, conforming to ISO* Standards.
* International Organization for Standardization

UNDERCARRIAGE

Tracks

Tractor-type undercarriage. Welded track frame using selected materials. Side frame welded to track frame. Lubricated track rollers, idlers, and sprockets with floating seals.
Track shoes with triple grousers made of induction-hardened rolled alloy. Heat-treated connecting pins with dirt seals. Hydraulic (grease) track adjusters with shock-absorbing recoil springs.

Numbers of Rollers and Shoes on Each Side

Upper rollers	2
Lower rollers	7 : ZAXIS 210X 8 : ZAXIS 210LCX
Track shoes	46 : ZAXIS 210X 49 : ZAXIS 210LCX
Track guards	2

Travel Device

Each track driven by 2-speed axial piston motor.
Parking brake is spring-set/hydraulic-released disc type.
Automatic transmission system: High-Low.

Travel speeds	High : 0 to 5.5 km/h Low : 0 to 3.5 km/h
Maximum traction force	203 kN
Gradeability	70% (35 degree) continuous

SOUND LEVEL

Sound level in cab according to ISO 6396	LpA 69 dB(A)
External sound level according to ISO 6395 and EU Directive 2000/14/EC	LwA 101 dB(A)

SERVICE REFILL CAPACITIES

Fuel tank	400.0 L
Engine coolant	28.0 L
Engine oil	23.0 L
Swing device	6.2 L
Travel device (each side)	6.8 L
Hydraulic system	240.0 L
Hydraulic oil tank	135.0 L
DEF/AdBlue® tank	57.0 L

WEIGHTS AND GROUND PRESSURE

Operating Weight and Ground Pressure

			ZAXIS 210X *		ZAXIS 210LCX *	
Boom type			Monoblock		Monoblock	
Shoe type	Shoe width	Arm length	kg	kPa	kg	kPa
Triple grouser	600 mm	2.91 m	22 000	49	22 500	47
	700 mm		22 200	42	22 800	40
	800 mm		22 500	38	23 100	36
	900 mm		–	–	23 400	32

* Including 0.80 m³ (ISO heaped) bucket weight (660 kg) and counterweight (4 850 kg).

Basic Machine Weight and Overall Width

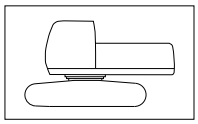

Excluding front end attachment, fuel, hydraulic oil and coolant etc. Including counterweight.

ZAXIS 210X

Shoe width	Weight	Overall width
600 mm	17 300 kg	2 860 mm
700 mm	17 500 kg	2 910 mm
800 mm	17 800 kg	3 000 mm

ZAXIS 210LCX

Shoe width	Weight	Overall width
600 mm	17 800 kg	2 990 mm
700 mm	18 100 kg	3 090 mm
800 mm	18 400 kg	3 190 mm
900 mm	18 700 kg	3 290 mm

Components Weight

	Weight
Counterweight : ZAXIS 210X / ZAXIS 210LCX	4 850 kg
Monoblock boom (with arm cylinder and boom cylinder)	2 210 kg
Arm 2.91 m (with bucket cylinder)	1 030 kg
Bucket 0.80 m³	660 kg

BUCKET AND ARM DIGGING FORCE

	ZAXIS 210X / ZAXIS 210LCX
Arm length	2.91 m
Bucket digging force* ISO	158 kN
Bucket digging force* SAE : PCSA	141 kN
Arm crowd force* ISO	114 kN
Arm crowd force* SAE : PCSA	110 kN

* At power boost

SPECIFICATIONS

WORKING RANGES: MONOBLOCK BOOM

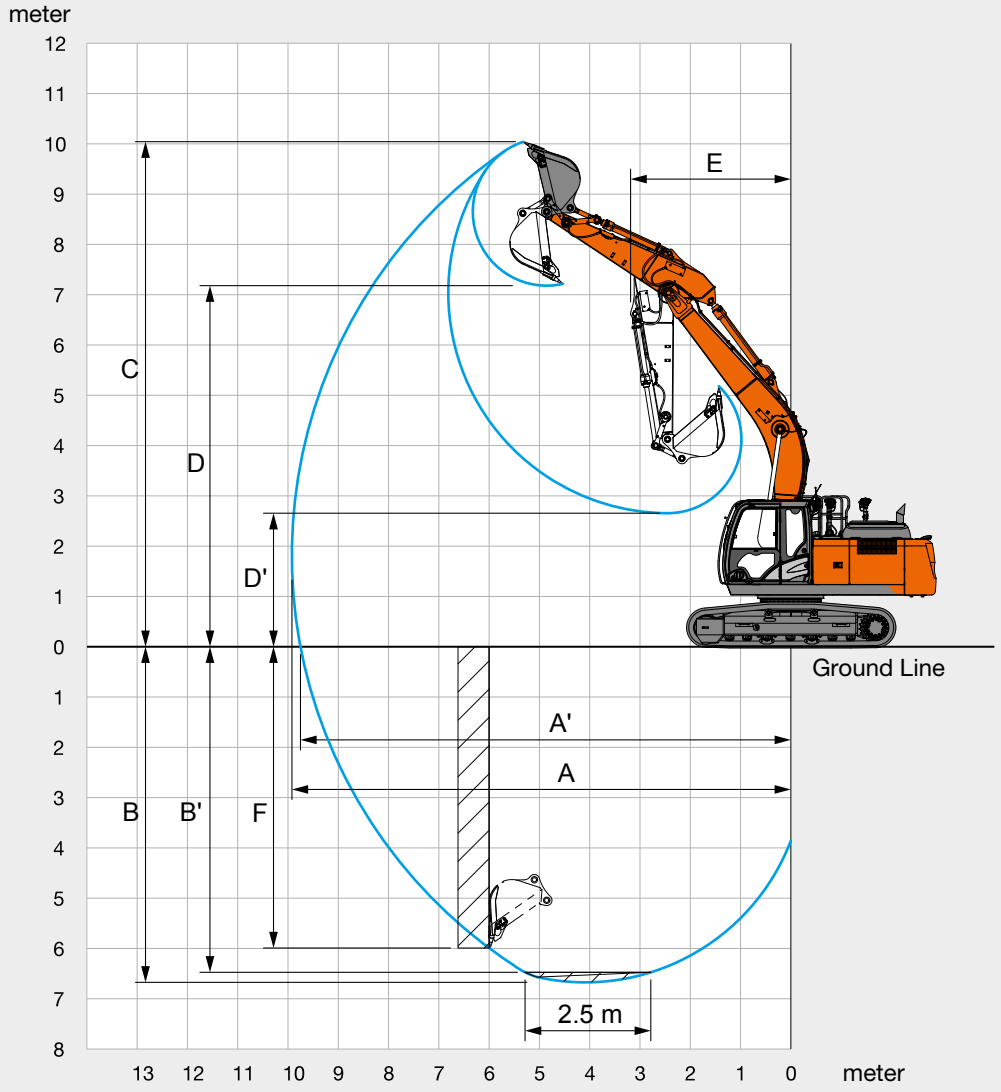

Unit: mm

	ZAXIS 210X / ZAXIS 210LCX
	Monoblock boom
Arm length	2.91 m
A Max. digging reach	9 920
A' Max. digging reach (on ground)	9 750
B Max. digging depth	6 670
B' Max. digging depth for 2.5 m level	6 490
C Max. cutting height	10 040
D Max. dumping height	7 180
D' Min. dumping height	2 650
E Min. swing radius	3 180
F Max. vertical wall digging depth	5 990

Excluding track shoe lug

DIMENSIONS

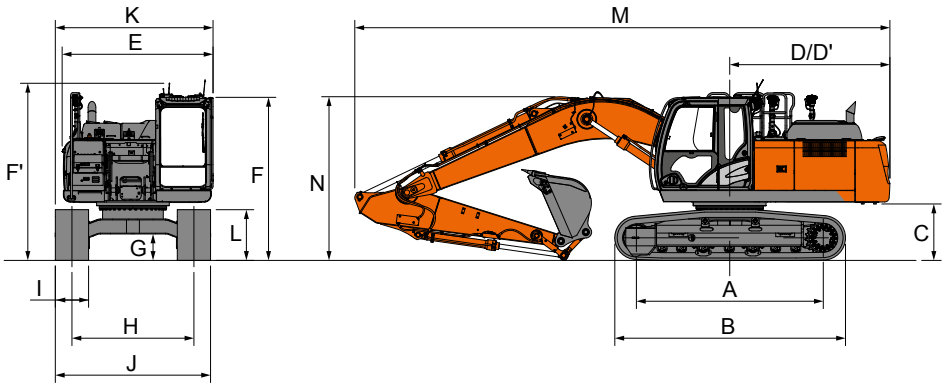

Unit: mm

	ZAXIS 210X	ZAXIS 210LCX
A Distance between tumblers	3370	3 660
B Undercarriage length	4 170	4 460
* C Counterweight clearance	990	990
D Rear-end swing radius	2 890	2 890
D' Rear-end length	2 890	2 890
E Overall width of upperstructure	2 710	2 710
F Overall height of cab	3 020	3 020
F' Overall height of upperstructure (contain antenna)	3 020 (3 200)	3 020 (3 200)
* G Min. ground clearance	450	450
H Track gauge	2 200	2 390
I Track shoe width	G 600	G 600
J Undercarriage width	2 800	2 990
K Overall width	2 860	2 990
* L Track height with triple grouser shoes	920	920
M Overall length with arm 2.91 m	9 660	9 660
N Overall height of boom with arm 2.91 m	2 940	2 940

* Excluding track shoe lug G: Triple grouser shoe

LIFTING CAPACITIES

Notes:
1. Ratings are based on ISO 10567.
2. Lifting capacity does not exceed 75% of tipping load with the machine on firm, level ground or 87% full hydraulic capacity.
3. The load point is the center-line of the bucket pivot mounting pin on the arm.
4. *Indicates load limited by hydraulic capacity.
5. 0 m = Ground.

For lifting capacities, subtract bucket and quick hitch weight from lifting capacities.

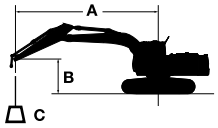

A: Load radius
B: Load point height
C: Lifting capacity

ZAXIS 210X MONOBLOCK BOOM

Rating over-front | Rating over-side or 360 degrees | Unit : kg

Conditions	Load point height m	Load radius 1.5 m		3.0 m		4.5 m		6.0 m		7.5 m		At max. reach		
														meter
Boom 5.68 m Arm 2.91 m Counterweight 4 850 kg Shoe 600 mm	6.0							*5 200	*5 200			*4 030	3 950	7.32
	4.5					*6 590	*6 590	*5 750	5 290	*5 370	3 760	*3 970	3 370	8.01
	3.0					*8 500	7 620	*6 620	5 050	5 380	3 650	*4 080	3 090	8.37
	1.5					*10 230	7 130	7 280	4 820	5 250	3 540	*4 360	2 990	8.45
	0 (Ground)			*4 830	*4 830	11 000	6 870	7 090	4 650	5 160	3 450	4 520	3 040	8.25
	-1.5	*5 470	*5 470	*9 090	*9 090	10 920	6 800	7 010	4 580	5 130	3 430	4 910	3 290	7.76
	-3.0	*9 960	*9 960	*14 340	12 970	*10 190	6 860	7 050	4 620			5 820	3 870	6.90
	-4.5			*11 210	*11 210	*8 090	7 070					*6 220	5 370	5.52

ZAXIS 210LCX MONOBLOCK BOOM

Rating over-front | Rating over-side or 360 degrees | Unit : kg

Conditions	Load point height m	Load radius 1.5 m		3.0 m		4.5 m		6.0 m		7.5 m		At max. reach		
														meter
Boom 5.68 m Arm 2.91 m Counterweight 4 850 kg Shoe 600 mm	6.0							*5 200	*5 200			*4 030	*4 030	7.32
	4.5					*6 590	*6 590	*5 750	*5 750	*5 370	4 140	*3 970	3 720	8.01
	3.0					*8 500	8 480	*6 620	5 590	*5 730	4 040	*4 080	3 420	8.37
	1.5					*10 230	7 970	*7 490	5 350	5 940	3 920	*4 360	3 310	8.45
	0 (Ground)			*4 830	*4 830	*11 080	7 700	*8 070	5 180	5 840	3 830	*4 870	3 370	8.25
	-1.5	*5 470	*5 470	*9 090	*9 090	*11 050	7 630	8 000	5 110	5 810	3 810	5 550	3 650	7.76
	-3.0	*9 960	*9 960	*14 340	*14 340	*10 190	7 690	*7 560	5 140			*6 220	4 300	6.90
	-4.5			*11 210	*11 210	*8 090	7 910					*6 220	5 970	5.52

EQUIPMENT

● : Standard equipment ○ : Optional equipment

ENGINE

Aftertreatment device	●
Air cleaner double filters	●
Alternator 50 A	●
Auto idle system	●
Auto shut-down control	●
Cartridge-type engine oil filter	●
Cartridge-type fuel main filter	●
Cold fuel resistence valve	●
ConSite OIL (Sensor)*	●
DEF/AdBlue® tank inlet strainer and extension filler	●
DEF/AdBlue® tank with ISO magnet adapter	●
Dry-type air filter with evacuator valve (with air filter restriction indicator)	●
Dust-proof indoor net	●
ECO/PWR mode control	●
Electrical fuel feed pump	●
Engine oil drain coupler	●
Expansion tank	●
Fan guard	●
Fuel cooler	●
Fuel pre-filter with water separator	●
Isolation-mounted engine	●
Maintenance free pre-cleaner	○
Radiator, oil cooler and intercooler	●

HYDRAULIC SYSTEM

Auto power lift	●
Control valve with main relief valve	●
ConSite OIL (Sensor)*	●
High performance filter with restriction indicator	●
Hose rupture valve for arm	●
Hose rupture valve for boom	●
Pilot filter	●
Power boost	●
Suction filter	●
Swing dampener valve	●
Two extra port for control valve	●
Variable reliefvalve for breaker & crusher	●
Work mode selector	●

CAB

All-weather sound suppressed steel cab	●
AM-FM radio	●
Ashtray	●
Auto control air conditioner	●
AUX function lever (Breaker assist)	○
AUX terminal and storage	●
Cigarette lighter 24 V	●
CRES V (Center pillar reinforced structure) cab	●
Drink holder with hot & cool function	●
Electric double horn	●
Engine shut-off switch	●
Equipped with reinforced, tinted (green color) glass windows	●
Evacuation hammer	●
Floor mat	●
Footrest	●
Front window washer	●
Glove compartment	●
Hot & cool box	●
Intermittent windshield wipers	●
Key cylinder light	●
Laminated round glass window	○
LED room light with door courtesy	●
OPG front guard Level II (ISO10262) compliant cab	○
OPG top guard Level I (ISO10262) compliant cab	●
OPG top guard Level II (ISO10262) compliant cab	○
Pilot control shut-off lever	●
Power outlet 12 V	○
Rain guard	○
Rear tray	●
Retractable seat belt	●
ROPS (ISO12117-2) compliant cab	●
Rubber radio antenna	●
Seat : air suspension seat with heater	●
Seat adjustment part : backrest, armrest, height and angle, slide forward / back	●
Short wrist control levers	●
Sun visor (front window/side window)	○
Transparent roof with slide curtain	●
Windows on front, upper, lower and left side can be opened	●
2 speakers	●
4 fluid-filled elastic mounts	●

MONITOR SYSTEM

Alarms: overheat, engine warning, engine oil pressure, alternator, minimum fuel level, hydraulic filter restriction, air filter restriction, work mode, overload, SCR system trouble, etc	●
Alarm buzzers: overheat, engine oil pressure, overload, SCR system trouble	●
Display of meters: water temperature, hour, fuel rate, clock, DEF/AdBlue® rate	●
Other displays: work mode, auto-idle, glow, rearview monitor, operating conditions, etc	●
Side view monitor	●
32 languages selection	●

LIGHTS

Additional boom light with cover	○
Additional cab roof front lights	○
Additional cab roof rear lights	○
Rotating lamp	○
2 working lights	●

UPPER STRUCTURE

Batteries 2 x 126 Ah	●
Battery disconnect switch	●
Body top handrail	●
Counterweight 4 250 kg : ZAXIS 210X / ZAXIS 210LCX	○
Counterweight 4 850 kg : ZAXIS 210X / ZAXIS 210LCX	●
Electric fuel refilling pump with auto stop and filter	●
Fuel level float	●
Hydraulic oil level gauge	●
Lockable fuel refilling cap	●
Lockable machine covers	●
Lockable tool box	●
Platform handrail	●
Rear view camera	●
Rear view mirror (right & left side)	●
Side view camera	●
Skid-resistant plates and handrails	●
Swing parking brake	●
Undercover	●
Utility space	●

UNDERCARRIAGE

Bolt-on sprocket	●
Reinforced track links with pin seals	●
Shoe: 600 mm triple grouser : ZAXIS 210X / ZAXIS 210LCX	●
Track undercover	○
Travel direction mark on track frame	●
Travel motor covers	●
Travel parking brake	●
Upper and lower rollers	●
2 track guards (each side) and hydraulic track adjuster : ZAXIS 210X / ZAXIS 210LCX	●
3 track guards (each side) and hydraulic track adjuster : ZAXIS 210LCX	○
4 tie down brackets	●

FRONT ATTACHMENTS

Casted bucket link A	●
Centralized lubrication system	●
Dirt seal on all bucket pins	●
Flanged pin	●
HN bushing	●
Reinforced resin thrust plate	●
WC (tungsten-carbide) thermal spraying	●
Welded bucket link A	○
Welded bucket link A with welded hook	○

ATTACHMENTS

Accessories for 2 speed selector : ZAXIS 210X / ZAXIS 210LCX	○
Additional pump (30 L/min)	○
Assist piping	○
Attachment basic piping	●
Breaker and crusher piping	●
Parts for breaker and crusher	●
Pilot accumulator	○

MISCELLANEOUS

ConSite OIL (Sensor)*	○
Global e-service	●
Onboard information controller	●
Standard tool kit	●

3D MC EQUIPMENT

Attitude sensor (boom, arm, bucket)	●
Communication terminals	●
Control levers with electric switches	●
Correction information receiver	●
Dedicated monitor	●
GNSS (2 units)	●
MC hydraulic control device	●
Vehicle incline sensor/controller	●

Standard and optional equipment may vary by country, so please consult your Hitachi dealer for details.
*Engine oil and hydraulic oil monitoring sensor.

Prior to operating this machine, including satellite communication system, in a country other than a country of its intended use, it may be necessary to make modifications to it so that it complies with the local regulatory standards (including safety standards) and legal requirements of that particular country. Please do not export or operate this machine outside the country of its intended use until such compliance has been confirmed. Please contact your Hitachi dealer in case of questions about compliance.

These specifications are subject to change without notice.
Illustrations and photos show the standard models, and may or may not include optional equipment, accessories, and all standard equipment with some differences in color and features.
Before use, read and understand the Operator's Manual for proper operation.

Hitachi Construction Machinery
www.hitachicm.eu

KS-EN418EU

Printed in Europe